Arduino Shield for NASA Balloon

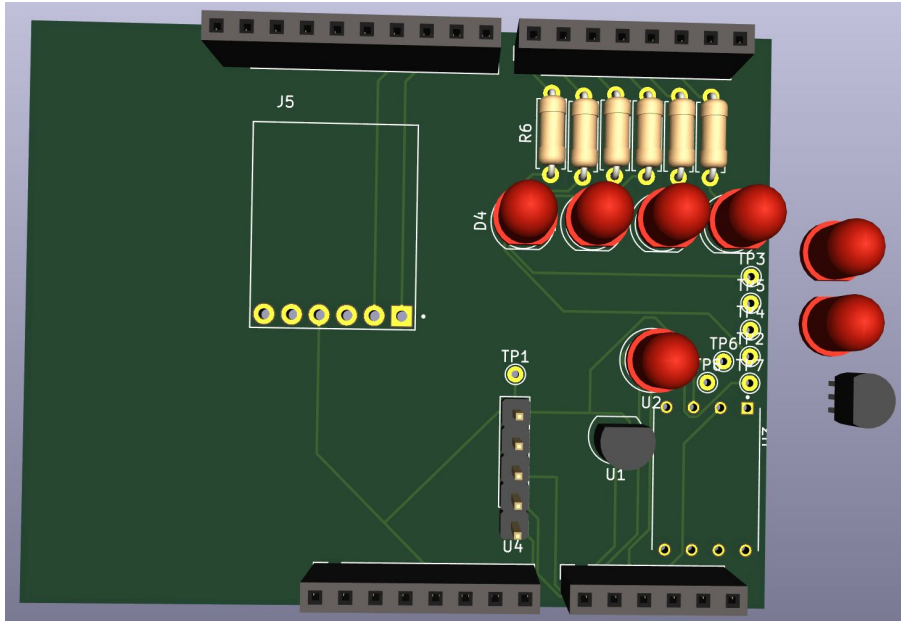

By Landry Ellis

Components (approximation, likely lower at higher volume)

	Price (each):	Weight (each):	Power Consumption (each):
9V battery	$1.59	40g	0
Battery Cable	$0.49	very little (2g maybe)	0
MicroSD	$10	23g	1.3mW
Thermometer	$1.75	0.2g	0.25mW
Pressure sensor	$18	4g	35mW
Humidity sensor	$7	3g	1.5mW
Accelerometer	$10	2g	1.1mW
Resistors	$0.06	0.1g	negligible
PCB	~$15	10g	0
LED’s	$0.10	0.3g	15mW (on)
Total	$63.99	85g	55mW

Block diagram

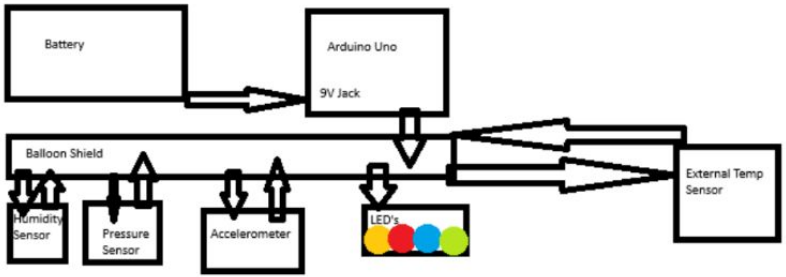

Figure 1: Block Diagram

Components

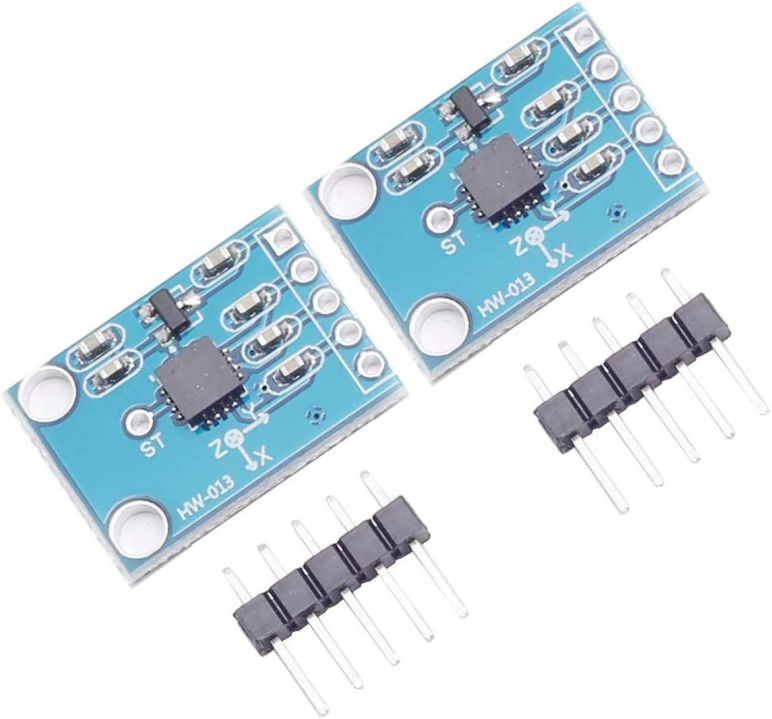

Components

Circuit Schematic

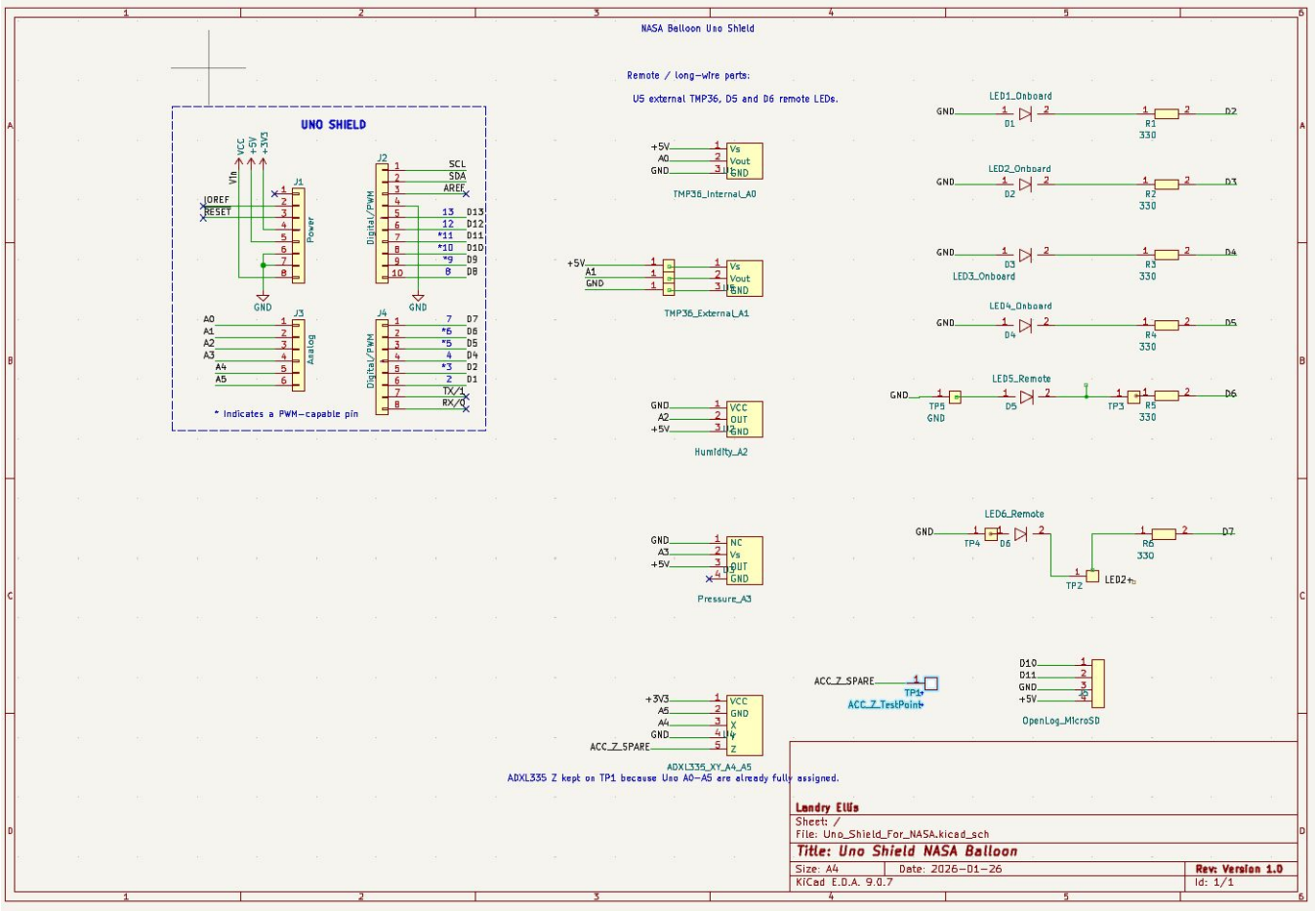

PCB Layout

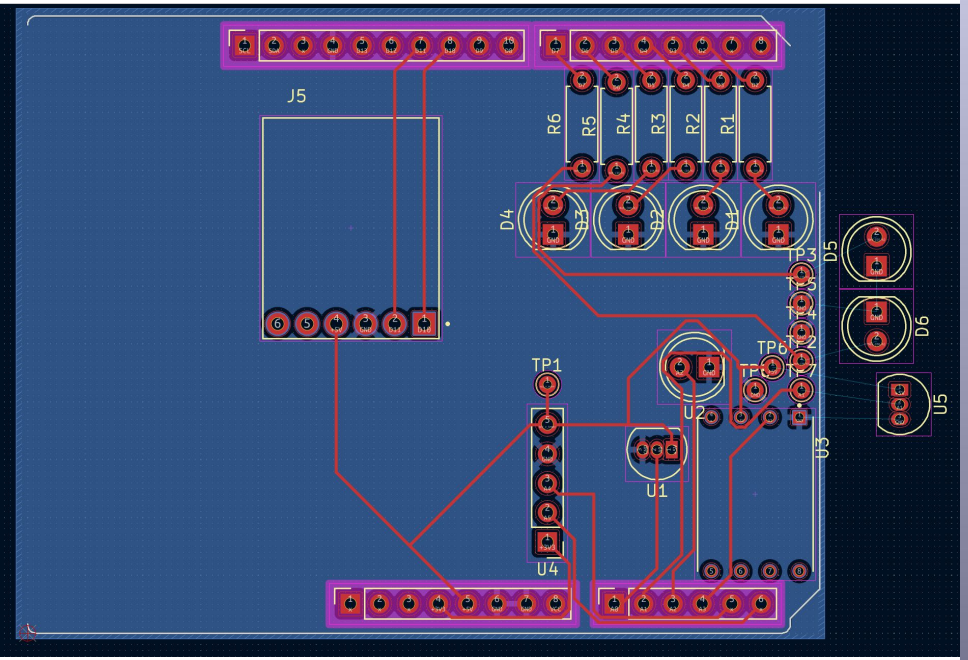
J5
R6
R5
R4
R3
R2
R1
D4
D3
D2
D1
D5
D6
TP3
TP5
TP4
TP2
TP7
TP6
TP1
U2
U1
U3
U4
U5

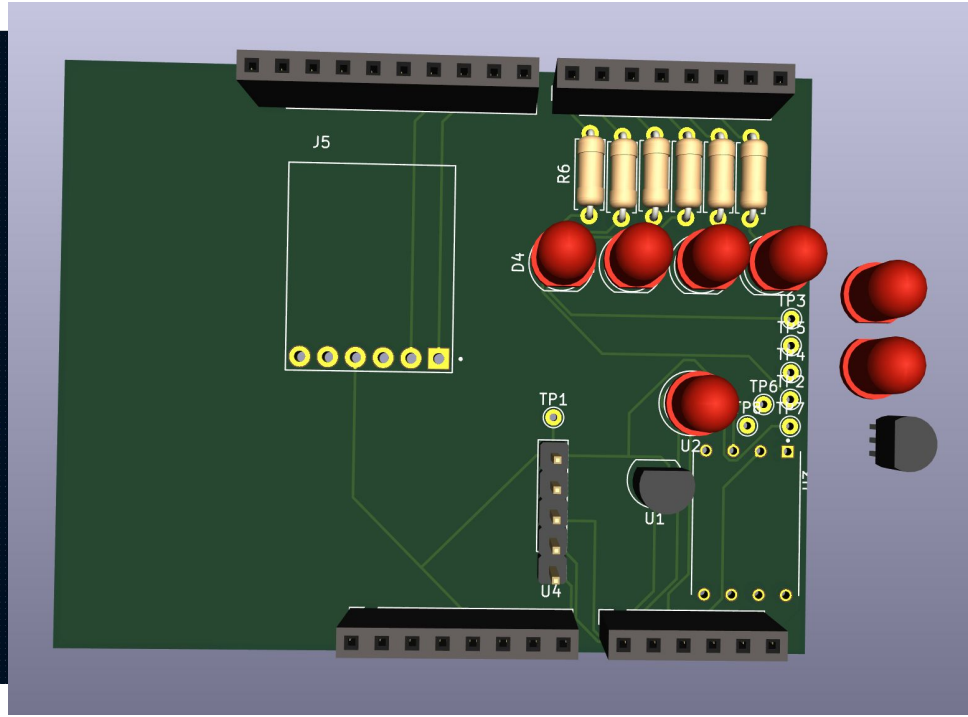
J5
R6
D4
TP3
TP5
TP4
TP2
TP7
TP6
TP1
U2
U1
U4

Links

Battery chord:
https://www.addicore.com/products/9v-battery-connector-to-barrel-jack-plug?variant=45759493112125&country=US&currency=USD&utm_medium=product_sync&utm_source=google&utm_content=sag_organic&utm_campaign=sag_organic&srsltid=AfmBOoppaRtCGPY4T5XJSeOBLoYyBhxa3jzUkfwiq0N1Ft-scPHRp43lGlo&com_cvv=8fb3d522dc163aeadb66e08cd7450cbbdddc64c6cf2e8891f6d48747c6d56d2c

Battery:
https://www.amazon.com/Amazon-Basics-Performance-All-Purpose-Batteries/dp/B00MH4QM1S/ref=sr_1_1_ffob_sspa?dib=eyJ2IjoiMSJ9.Hdl5owgW_n2zPN_a8jEWVrnTJGbLULtKhQmcMN_e-eXhBrfy3GUBZcA1a65vWXZigeaXsw7ng3G6zjTbJql_TcOD4UdRast7790rdtAhYnjinpzMQjbalMt9gyAZJjLFe_vmnSonAzx8lemmzGNGftUWwGgjzMRj4q2G74kn39aPgNKuJUjArMMjrv5dSQd8LHcnVl1wGd1123nvpLy2DtsPt373n0W2b46utC3DEdzDY5etIVO8KwVymZT96yBbcwHpWAJeizQB8Fi7WJDBQNeF3KXzptatrPKQoXWMAkc.biuS3w1_SkPyCQm2J9eouMoPyilS430zxNQwpNR-b_M&dib_tag=se&keywords=9v%2Bbattery&qid=1773403450&rdc=1&sr=8-1-spons&sp_csd=d2lkZ2V0TmFtZT1zcF9hdGY&th=1

MicroSD:https://www.sparkfun.com/sparkfun-openlog-with-headers.html

Thermometer:https://www.amazon.com/Bridgold-TMP36GT9Z-Temperature-Analog-Voltage/dp/B07LG758H3/ref=sr_1_4?dib=eyJ2IjoiMSJ9.VzayGqBKyq8z4l9agIQLpW0cWstI1-KsR2rjEJlbyX0hzNXBvfBKntIVgwaTPMdWmaFi1PRu2NTzkeZVluilCAFecn0B5BpyEIF421c8ld_5BK04EtYHi_NH-npusTkUe5buJHlaEaShNCsFTk596g2x07eu5f6D4ybph75aDf9HGgyPdXZU1_0pgM2hnv5G173F5zo9EtNeGnWhpuWVyQlICMS6NrfCidvzUDgfAks.z670g1M_mMTjdBLQK-LgUthsXiynPZ-8xR0MylvyeM4&dib_tag=se&keywords=tmp36+temperature+sensor&qid=1773404055&sr=8-4

Pressure sensor:
https://www.digikey.com/en/products/detail/honeywell-sensing-and-productivity-solutions/SSCDANN015PAAA5/2416079?gclsrc=aw.ds&gad_source=1&gad_campaignid=120565755&gbraid=0AAAAADrbLlhd93CG6LUM2wR5GhqB6xWoj&gclid=CjwKCAjw687NBhB4EiwAQ645dtTp0tr3QZGaoRBEfSowrFfUibNMqZrYtYlPd5viwxfkuIG5VaR6TxoCUzQQAvD_BwE

Humidity sensor:https://us.rs-online.com/product/rs-pro/2465629/74065571/?utm_source=SnapEDA&utm_medium=part_sourcing&utm_campaign=partsourcing_SnapEDA_IMP_EX_GR

Accelerometer: https://www.amazon.com/DEVMO-ADXL335-Accelerometer-Transducer-Compatible/dp/B07Y881FQ4?utm_source=chatgpt.com

Resistors:https://www.amazon.com/EDGELEC-Resistor-Tolerance-Multiple-Resistance/dp/B07QH5PFG3/ref=sr_1_1_sspa?dib=eyJ2IjoiMSJ9.40_QyBHV1dGHXx0WbFaF1EF9UqjezSr0DYqXIVvFwfQKTdpqFPtHAujwbUptw6ZyI4tKv7q7Ibeq-NMQC7-btm3TqO35HdzyMfKK90b7c5DPwo58TBDJDt0MqpZVTKpYtBjsbsdzyNnqBYGVbhxnakhLyj2nmX3xWx1LVIN4qY7Ov1PKn-GeSkEWwAB7v4t6X9u8u6nBvt0n_aq6vm-W-vdzO1DfEUeun6PWWFt1sDE.2ZEwIqM-Iq53M8-JzUDbuRjKeIIMe3xiKe45pyQ8NdQ&dib_tag=se&keywords=330%2Bohm%2Bresistor&qid=1773406195&sr=8-1-spons&sp_csd=d2lkZ2V0TmFtZT1zcF9hdGY&th=1

Pcb:https://oshpark.com/

Led's:
https://www.digikey.com/en/products/detail/rohm-semiconductor/SLR-56VC3F/636991?gclsrc=aw.ds&gad_source=1&gad_campaignid=20747733577&gbraid=0AAAAADrbLlggiXw1W3EFt_viyibfGCrR0&gclid=CjwKCAjw687NBhB4EiwAQ645dnFlqiCDTNs6hksyrpuAg3C34EB6P4alYbh-0x-D8RtVOnYODqyLwxoC7kYQAvD_BwE